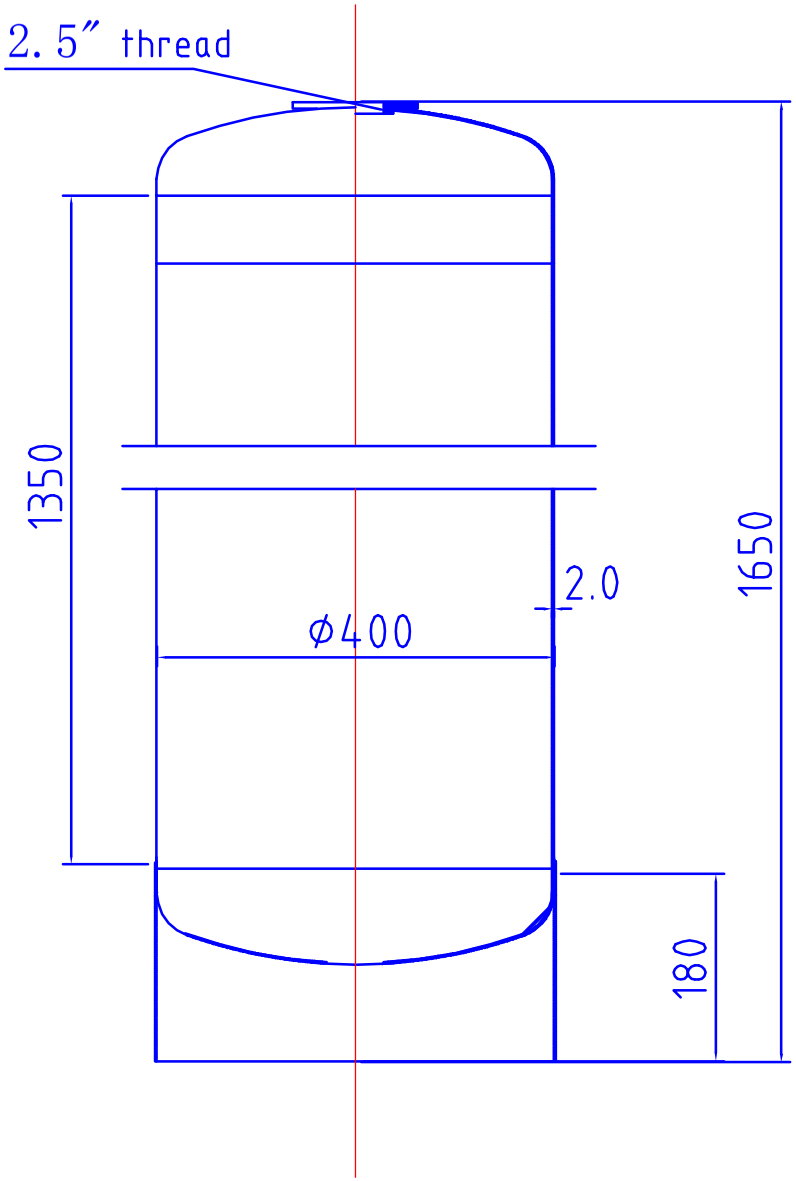

SUS304	400DX1650H
	SOFTENING VESSEL
	BONA-WATER